Arc Flash Exercise 1

Purpose & Description

Add transformer primary side protection to Systems 1 and 2 and try to coordinate it with the secondary side protection. The settings of the transformer primary side protection should limit the incident energy to a Category 2 level (based on NFPA 70E 2004 definitions) for a fault at the transformer secondary bus and the line side of the main secondary circuit breakers.

Setup

Load the project file named “Arc Flash Example1”. The solution to this example is located in a directory called “Solution1”. Open the solution project only to compare against your exercise once completed.

System1 and System2 are almost identical, each without transformer primary side protection. There are four TCC views included in the project which allow you to see the current protective device settings for the secondary protective devices.

Add the primary protective devices to the one-line diagram and after to the corresponding TCCs. After adding the devices, compare and adjust their settings with respect to the 4.16 kV secondary side PDs. Please adjust the settings as you feel necessary while trying to keep the incident energy level to a category 2. You may also plot the primary protection by itself if needed, or you can use the TCC 2nd axis feature to show a second axis plotted on the primary side base kV (plot kV = 12).

Procedure

Step1

Open study case “AF MV”. Take a look at the Info page and the Arc Flash pages.

1.1 Why has the option “Symm. 1.5 to 4 Cycle” been selected? (Clue: look at the faulted bus nominal kV) ____.

1.2 What is the incident energy limit for category 2 level based on NFPA 70E 2004? (Clue: look at the project settings\Hazard Risk Category editor) _________________________.

Step2

Run the AF calculation and observe the arc flash results displayed on the one-line diagram (OLD) and on the Arc Flash of the faulted bus editor. Observe the Arc Flash Analysis report as well, and answer the following questions:

2.1 What is the total arcing current for a fault at Bus A? _________ kA.

2.2 What is the total incident energy for a fault at Bus A? _________ cal/cm^2.

2.3 What is the arcing current contribution passing through Main CBA? __________ kA.

2.4 What is the ID of the source protective device? ____________ What is the FCT? ______ Sec.

2.5 What is the arcing current contribution seen on transformer T2’s primary winding? _____ kA.

Step3

Add a fuse for the transformer primary winding protective devices in System1.

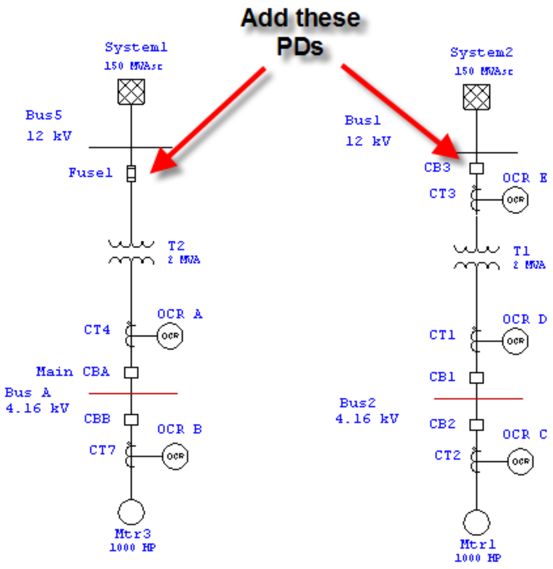
Add these PDs
System1
150 MVAsc
Bus5
12 kV
Fuse1
T2
2 MVA
CT4
OCR A
OCR
Main CBA
Bus A
4.16 kV
CBB
OCR B
CT7
OCR
Mtr3
1000 HP
System2
150 MVAsc
Bus1
12 kV
CB3
OCR E
CT3
OCR
T1
2 MVA
CT1
OCR D
OCR
CB1
Bus2
4.16 kV
CB2
OCR C
CT2
OCR
Mtr1
1000 HP

The fuse can be of any type within the ETAP library and it is strongly suggested that you try different types. Run the AF calculation and check the TCCs to see if your solution is acceptable.

Suggested Solution for System1:

Insert a fuse into the transformer primary with the following ratings.

1. Standard = ANSI
2. Manufacturer = Southern States
3. Model = BPA-PF
4. Slow Speed
5. Interrupting current = 10 kA
6. Size = 100A (100 Amp continuous current)

3.1 What is the Incident energy released for a fault at line side of Main CBA ________ cal/cm^2. (Clue: Look at the Arc Flash analysis report and check if it is below Cat 2)

3.2 What is the Fault Clearing Time for a fault at line side of Main CBA________ Sec. (Clue: Look at the arc Flash analysis report)

(See next page for TCC view of T2 in system1)

Arc Flash Exercise 1

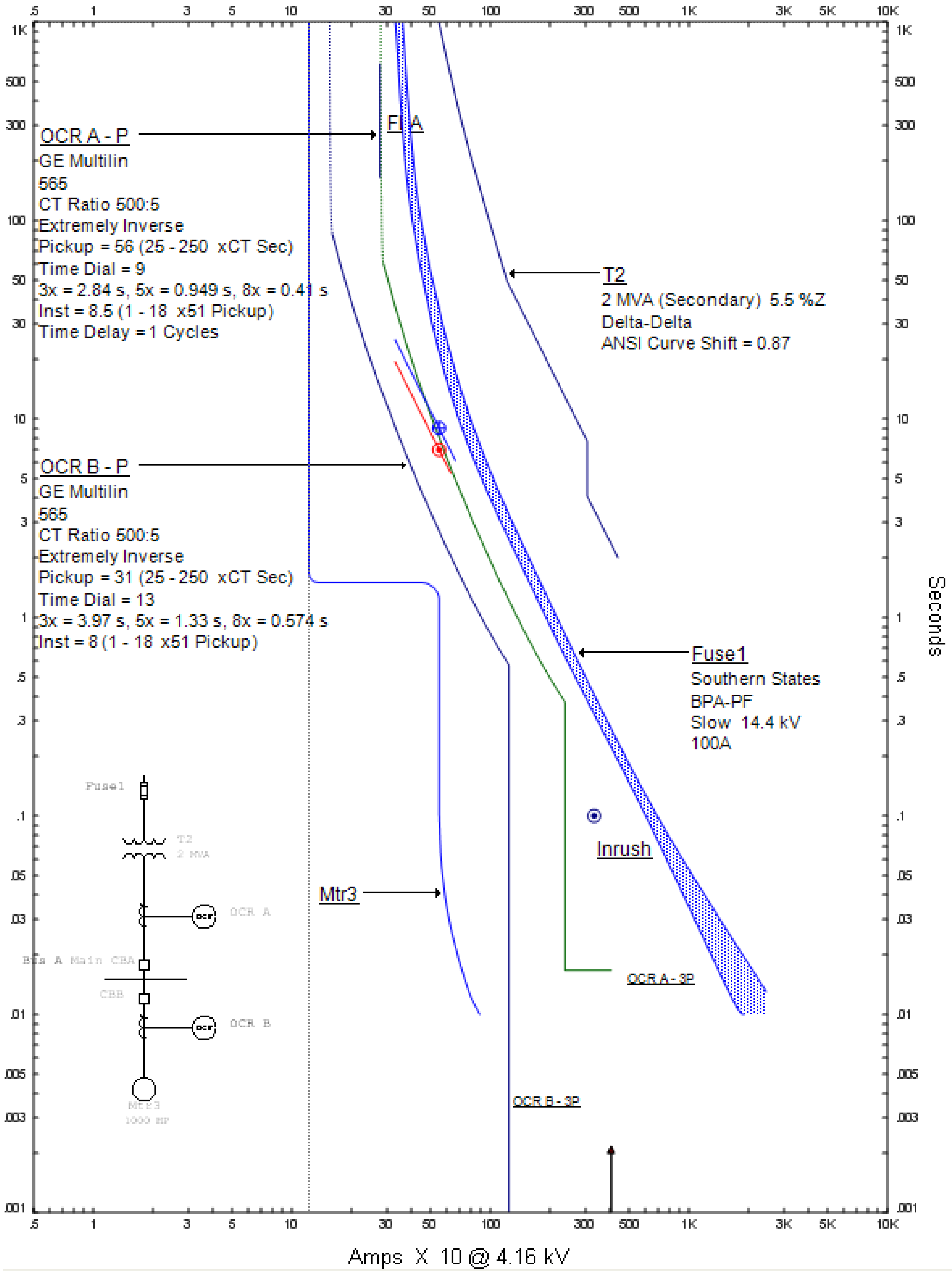

Step4

Add a High Voltage Circuit Breaker for the transformer primary winding protective devices in System2. The HVCB, Current Transformer and Relay can be of any manufacturer or type within the ETAP library and it is strongly suggested that you try different types. Run the AF calculation and check the TCCs to see if your solution is acceptable.

Suggested Solution for System2:

Add a HVCB, Current transformer and Overcurrent Relay into the transformer primary. Enter the CT turn ratio and interlock the relay and HVCB.

1. CT turn ratio = 200/5
2. 5 cycle HVCB cycle breaker with CPT = 3 cycles.
3. OCR device manufacturer, model and settings see image below:

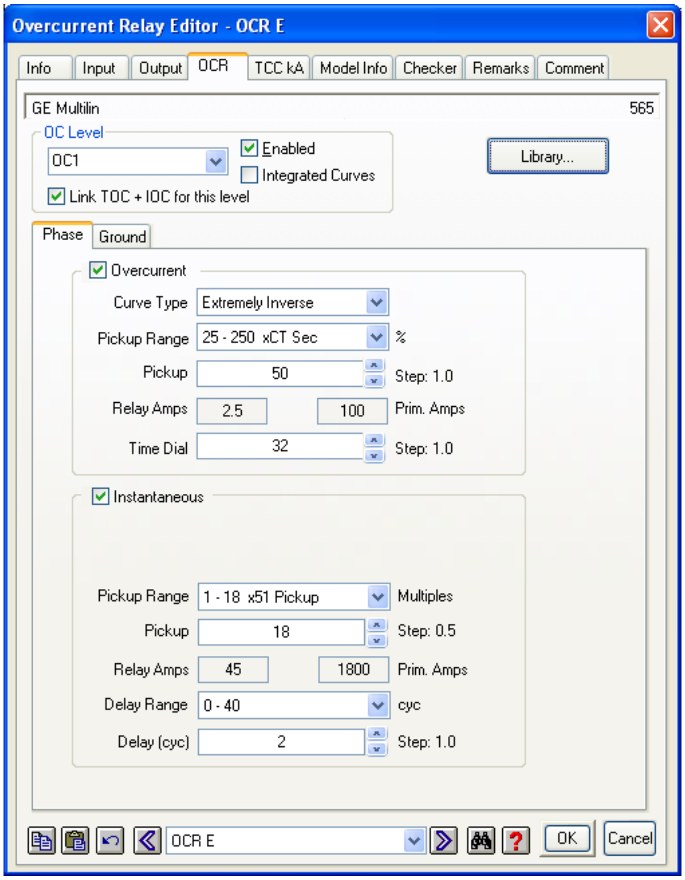

Overcurrent Relay Editor - OCR E

GE Multilin 565

OC Level: OC1
☑ Enabled
☐ Integrated Curves
☑ Link TOC + IOC for this level

☑ Overcurrent
Curve Type: Extremely Inverse
Pickup Range: 25 - 250 xCT Sec %
Pickup: 50 Step: 1.0
Relay Amps: 2.5 100 Prim. Amps
Time Dial: 32 Step: 1.0

☑ Instantaneous
Pickup Range: 1 - 18 x51 Pickup Multiples
Pickup: 18 Step: 0.5
Relay Amps: 45 1800 Prim. Amps
Delay Range: 0 - 40 cyc
Delay (cyc): 2 Step: 1.0

OCR E

4.1 What is the Incident energy released for a fault at line side of Main CB1 ________ cal/cm^2.

4.2 What is the Fault Clearing Time for a fault at line side of Main CB1________ Sec.

(See next page for TCC view for T1 in system2)

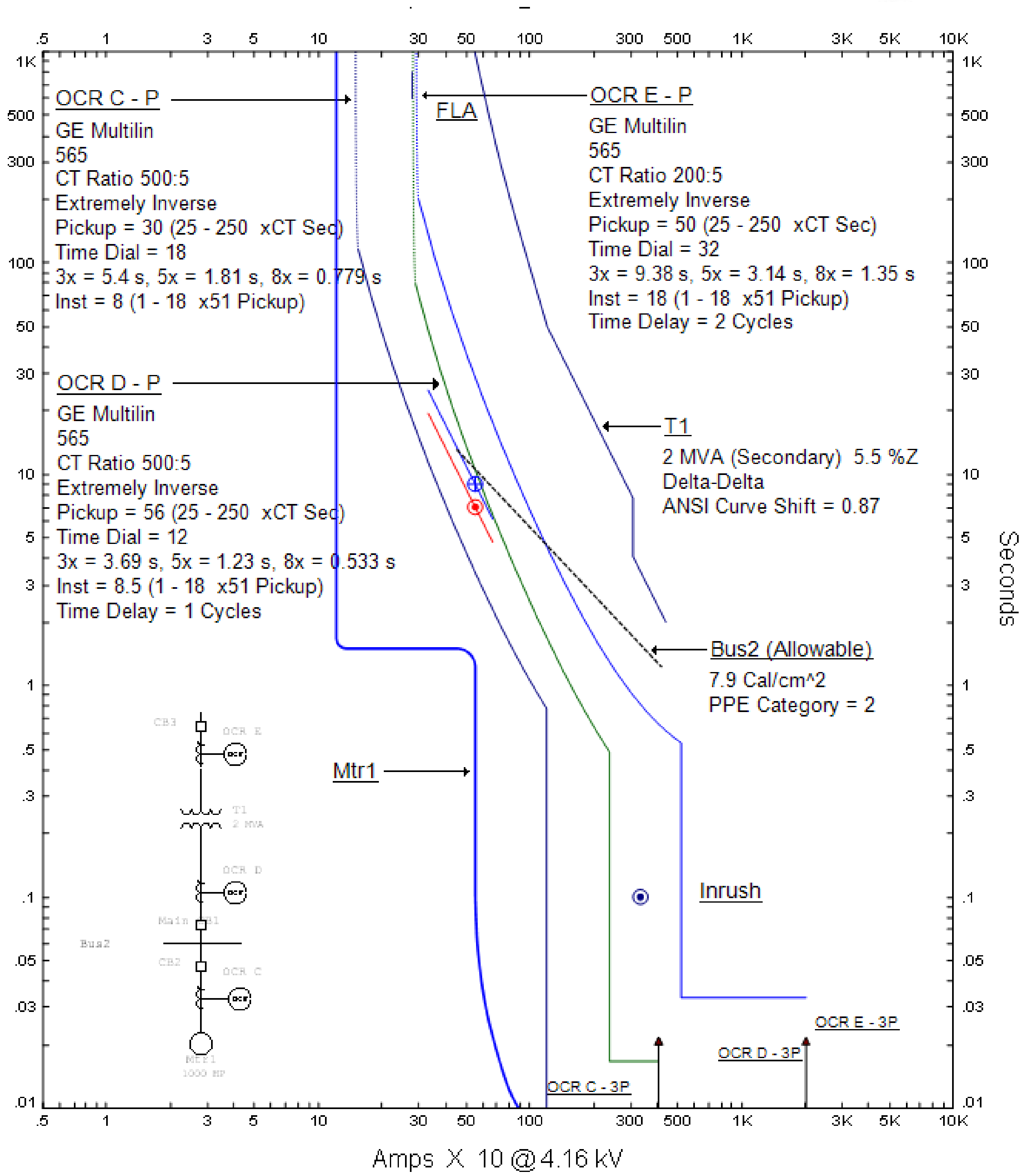Arc Flash Exercise 1